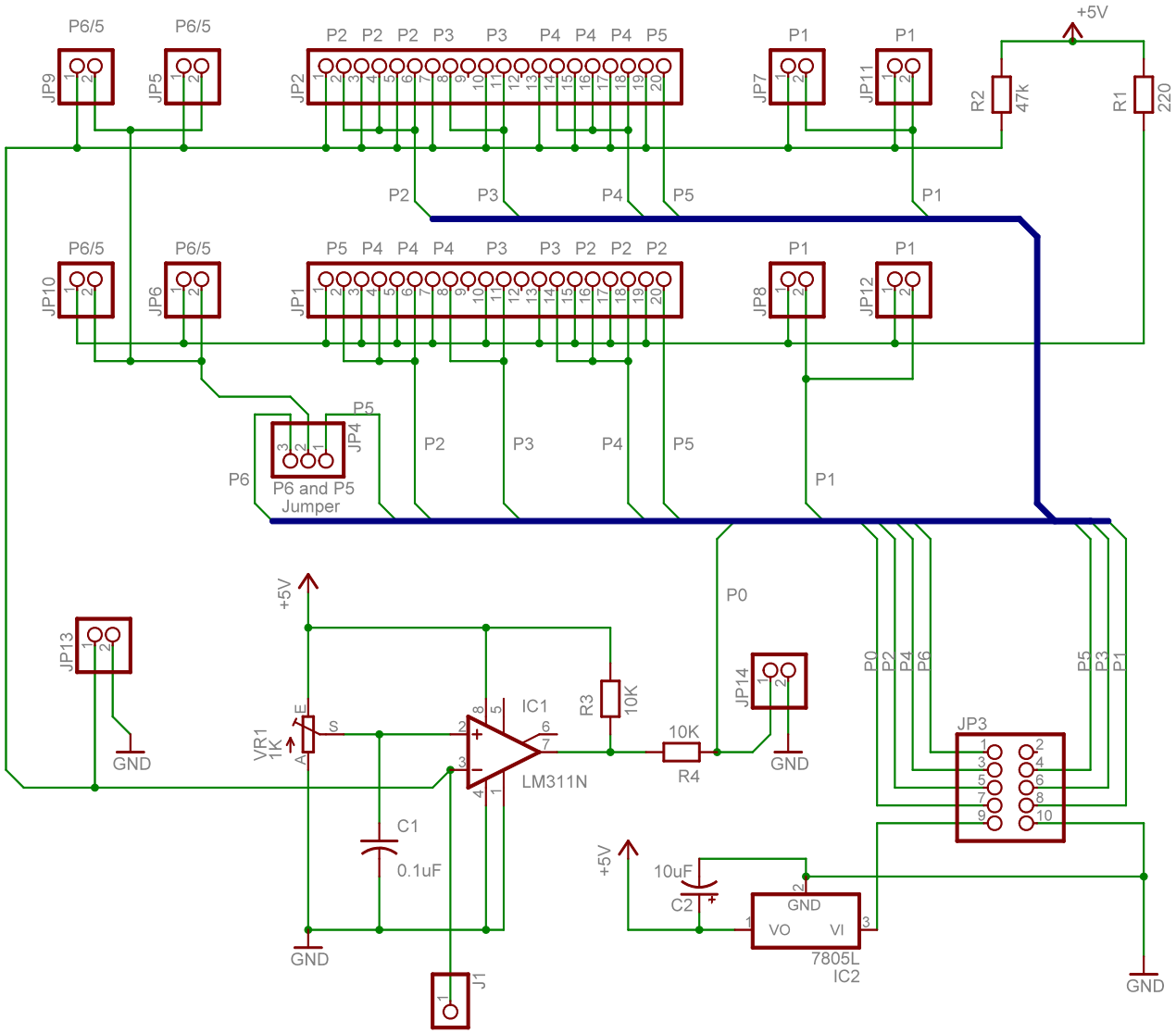

TITLE: CBALFM	
Document Number:	REV:
Date: 2/23/2005 08:47:38p	Sheet: 1/1